Advanced Transmission System

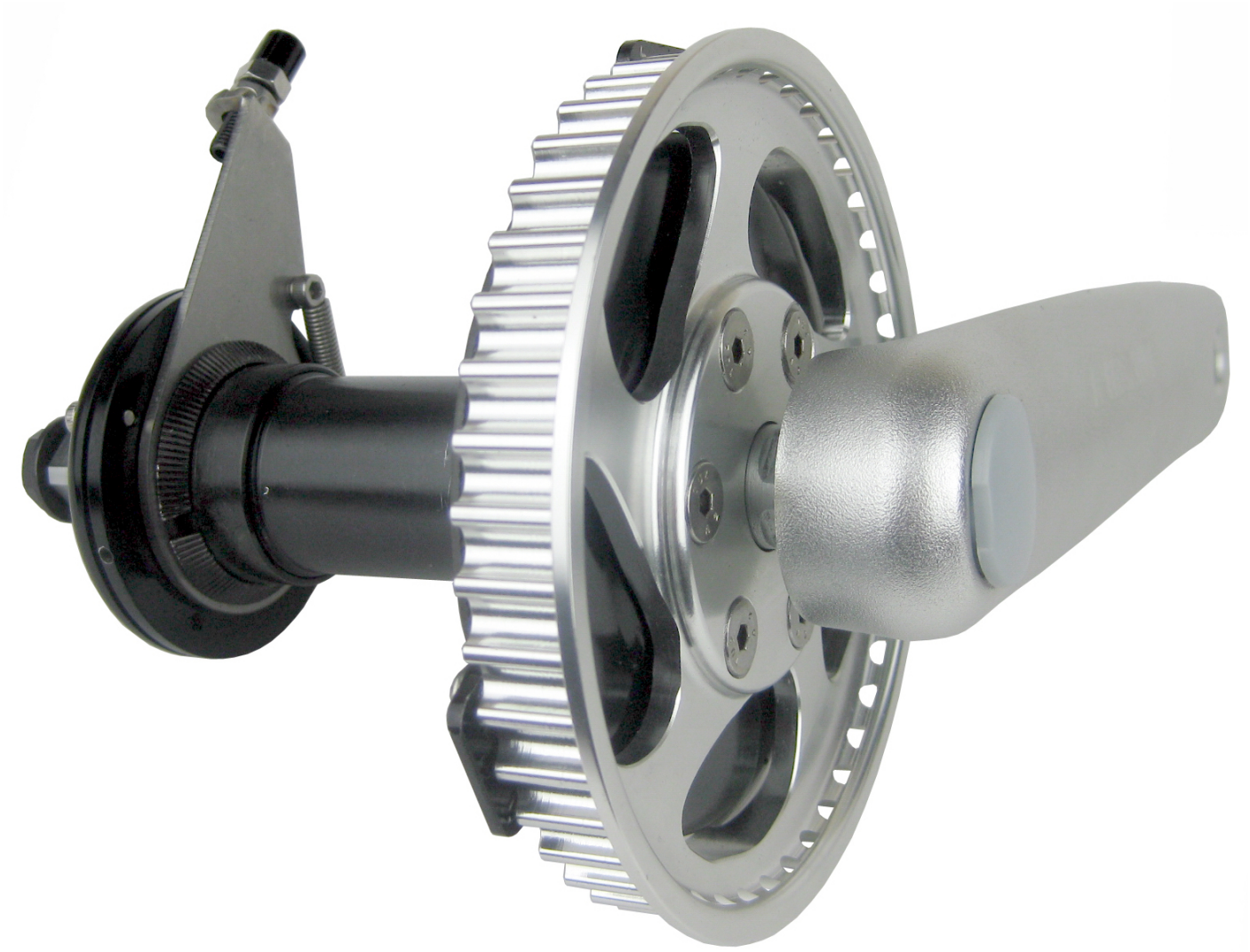

PEAKBUYER CO.,LTD.
TEL:+886-4-23868162
FAX:+886-4-23868186
Email:sales@ats-speeddrive.com
www.ats-speeddrive.com
17C,No.12, Sec.5,XiangShang Rd.,
Taichung, Taiwan.

June 2014

Content

Where can *ATS-speed-drive* be installed? A-1
- Standard frames
- Large-diameter bottom brackets
- Frames without a standard chainstay

- Replacing a triple chainring A-2
- Double chainrings
- Extra wide bottom brackets (wider than 74mm)
- Carry me

- Strida, Brompton, Birdy, A-3

- Frog & Co.Moulton, A-4
- Left-hand installation
- Fixed-gear bikes / Single speed
- Dahon
- Tandem

- Closed chainguard A-5
- Clamped Chainguard holder
- Special applications

- Handbikes A-6
- *ATS-speed-drive* with integrated 27t. chainring

Installation B-1
- Chamfering the bottom bracket shell
- Cone rings for aluminum and steel frames
- Extra wide cone rings

- Tightening B-2
- Chainrings

- Trouser guards B-3
- Chainring screw sets

- Mass assembly of chainrings B-4
- Axle bolts

- Gear shift buttons B-5
- New gear shift buttons

- Mass assembly of gear shift buttons / Kickplate installation B-6

Maintenance C-1
- Lubrication
- Adjusting the gearing play

- Swapping chainrings C-2
- Removing cranks

Technical data J-1

Check list before ordering L-1

A-1

Where can *ATS-speed-drive* be installed?



Standard frames

Frames with BSA bottom brackets (inner diameter of 33.6 - 34mm)

To fit the *ATS-speed-drive* unit, you must chamfer the bottom bracket with a milling cutter.



The tool is available as an accessory or on a rental basis (we have tool-rental service).

The cone installation requires that you follow our instructions carefully for good results.
Chamfering and tensioning must be performed very precisely.



W = 39 ~ 39.5 mm

With the cone rings, you must not clamp any parts (trouser guard, chain holders,etc.) between gear housing and cone ring.

Important: On the right-hand side, always use a steel cone ring for aluminum bottom brackets and an aluminum cone ring for steel bottom brackets!



Large-diameter bottom brackets

(larger than 34mm, as in Thompson and Fauber bottom brackets)

You can´t fit a ***ATS-speed-drive*** to bottom brackets with larger diameters than 34.5mm.



Tighten with the box spanner (-> tool set “Installation + Maintenance”) to a tension of 140 - 160Nm (100 - 115 lbft).

Replacing a triple chainring

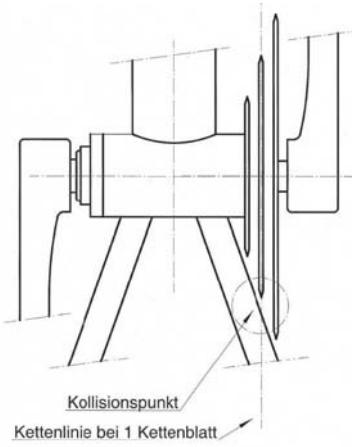

It´t never a problem to install a ***ATS-speed-drive*** on a frame designed for a triple chainring as it sometimes is with the **mountain-drive** due to its large chainring.

Double chainrings



Bikes built for double chainrings can easily accommodate any ***ATS-speed-drive.*** It always comes with a steel spider, that is strong enough for holding two chainrings.
One chainring is fitted to the right side of the spider, one to the left. Always use a 2mm spacer between.

Extra-wide bottom brackets (wider than 73mm) and wide chainlines (for Rohloff Speedhub)

The standard ***ATS-speed-drive*** is designed for bottom bracket widths of 67.5-73mm. For special bottom brackets wider than 73mm, we offer a version with an axle 10mm longer. Also the gear housing attached the bottom bracket, is 10mm longer.
When ordering the version for wide bottom brackets, please mention your bottom bracket's exact width so that we can include a pair of spacers as needed. This "+10mm" version is also used for "Long John" transportation bikes and certain Moulton and Birdy folding bikes (see next page).
In combination with a Rohloff Speedhub it gives the wide chainline required by the Rohloff hub.

Carry Me



The Carry Me single speed version upgrade into 2 speed by ATS-speed drive. Only with a 3mm spacer on right side and 3mm black nut on left side.

A-3

Strida

Strida single speed version upgrade into 2 speed: We offer the BB-adapter + Belt wheel + ***ATS-speed drive*** + Belt. The modification only about 10 min can finish and easy to install by consumer.



Brompton

The Brompton bicycle has an extremely thin-walled bottom bracket shell. It´s therefore very important that you follow our instructions carefully for good results. You must chamfer the bottom bracket up to a sharp edge as seen on the right.
The Brompton version also comes with a modified nut (3mm nut) on the left side for tightening.

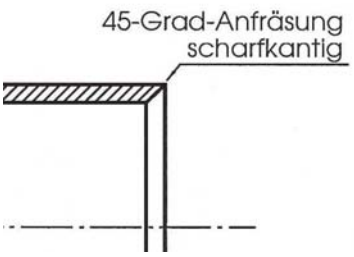

All chainrings with bolt circle diameters of 110mm for Brompton folding bikes must be turned on a lathe to enlarge the inside diameter from 94to approximately 96mm. Please note: Original ***ATS-speed-drive*** chainrings just come with the appropriate inside diameter.



Birdy

The Birdy with its thick-walled bottom bracket shell made of aluminum, always allows for the cone-ring installation. No torque lever is required. Please note: Birdy models prior to 1999 had an unusually wide chainline of 56 mm. For them, we can deliver the longer axle with spacers. Newer Birdies have a chainline of approximately 50 mm. Here, you screw the chainring to the outer side of the spider to get the correct chainline. If using a chainring larger than 50 teeth and fitting it to the outside, please use the steel spider. The Birdy requires two trouser guards to hold the chain when being folded.



Advanced Transmission System

A-4

Frog



ATS-speed-drive is an ideal gearing system for the R&M Frog. Frog comes with a much too short gear range, so a small 38t. chainring gives Frog a nicer top speed. If ordering please specify “for Frog” and we deliver the correct spacers needed for the installation.

Single-speed (Fix gear bike)

The ***ATS-peed drive*** is a perfect solution for single speed bikes with its step of 1:1.65.

Left-hand installation

The ***ATS-peed drive***’s clutch is designed for 2 directions (clockwise and counterclockwise). You can use chainring on right side for regular install. You also can install chainring on left hand side. Therefore the ATS-speed drive can fit for coaster brake system.

Dahon



Newer Dahon models no longer have a seat tube that penetrates the bottom bracket. A standard ***ATS-speed-drive*** will now fit without problems.

Tandems & Recumbent



ATS-speed drive can be used on tandems. Please note, that ***ATS-speed drive*****,** due to its smaller chainring, increases the torque exerted on the rear gearing system. Combined with the torque generated by two riders, it can overload the rear gearing system. The **ATS-speed-drive** system is installed at the stoker’s position. You can use the original left crankarm with spider and chainring for the left side. If using crankarms that are not stock, please check, that the hole, where the gear shift button is located, has a depth of at least 8mm (to sure that the gear shift button doesn’t protrude when pushed in).

A-5





Closed chainguard

It's no problem to use a ***ATS-speed drive*** with a closed chainguard. Please notice, that you mustn't clamp a chainguard holder between bottom bracket shell and the gear housing!!



Clamped chainguard holder

Please never clamp a chainguard holder between bottom bracket shell and the gear housing!! There is a torque on the gear housing, that can't be hold bythe b.b. shell, if a chainguard holder or other item is clamped in between.

Special versions

We offer custom versions of all of our gearing systems for special Applications such as the back pack airplane "Flyke" on the right! This one for example comes with an extra wide bottom bracket shell (needed for landing!).



Ask us for an offer.







Advanced Transmission System

A-6

Handbikes

Nearly all handbike makers offer their handbikes with **mountain-drive**.
We make many special versions, for example such with longer axles.





ATS-speed drive with integrated 27t. chainring



ATS-speed drive with integrated 27t. chainring is an extremely compact and efficient gearing system. The 27t. chainring equals one of 45t. in high gear!

We deliver a trouser guard, which comes
black anodized or (as an option) high polished and chrome plated.



The 27t. setup offers in combination mit internal hubs as well as derailleur systems an ideal number of speeds.

See sample: The combination of Shimano Inter-8 internal hub + ***ATS-speed drive*** 27t. offers 505% of gearing range.

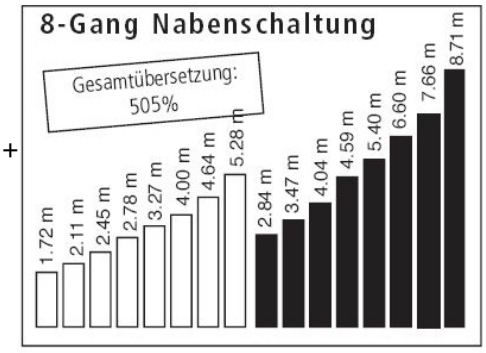

-> speed-drive with 27t. chainring
-> Shimano Inter-8 with 18t. cog
-> Rear wheel 700C

B-1

Installation



Chamfering the bottom bracket

To install cones,you must mill a 45° bevel into both of the bottom bracket's faces.The outer diameter of this conical part must be between 39 and 39.5mm.This is very important,as it creates additional surface area,so that the cone rings will have enough friction to counter the torque of the planetary system.



Do not chamfer up to an outer diameter of 40mm,as this will allow the cone rings to "swim"within the chamfered part with no load on their surface,even with correct tightening

Use some cutting oil for lubrication while chamfering.For installation,the conical areas must be completely dry and clean! No grease!



W = 39 ~ 39.5 mm

Please note:In most countries,the 45° milling cutter can also be rented.

Cone rings for aluminum and steel frames

Use a knurled steel cone for aluminum frames and an aluminum cone for steel frames.Please mention your frame's material when ordering.



Aluminum corn (w/o knurled) for steel frame

Extra wide cone rings

We deliver 3mm spacer with cone ring for installation on unusual frame.

.

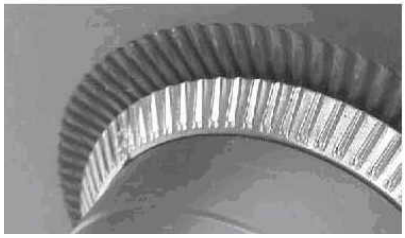

Steel corn (with knurled) for aluminum frame

Tightening



The black nut on the left sidemust be tightened to the correct torque for cor-rect operation.
If available,always use a torque wrench for tightening (torque on cone rings:140-160Nm / 100-115 lb ft).
Important: The ATS-speed-drive nut has a right hand thread!!



Chainrings



As far as possible,the chainring should be fitted to the left side of the spider.

Note: Original Schlumpf chainrings can be mounted with the ATS-speed-drive unit already installed in the frame.

Chainrings smaller than 40teeth must have an inner diameter of 96mm (instead of 94) in order to pass over the spider.

If your bike needs a different chainline (distance from centerline of frame to centerline of chain),you can use longer chainring screw sets combined with spacers.Please contact us..



Trouser guards

If mounting trouser guards,always use a 2mm spacer between chainring and spider or between spider and trouser guard,according to the chainline you want to achieve.

Two trouser guards can easily be fitted by mounting one on the left side of the chainring (with two 2mm spacers between) and one to the right side of the spider.(with one 2mm spacer between).





Chainring screw sets

When using your own chainring screws and nuts,make sure they have the cor-rect length.The nut mustn't be flush with the surface of the spider (see photo on the right side) so that the screw can be properly tightened.If the screw does not have at least 0.5mm of margin,the nut will spin and cannot be tightened correctly.



If the nut seems to be too long,you can turn the chainring around.

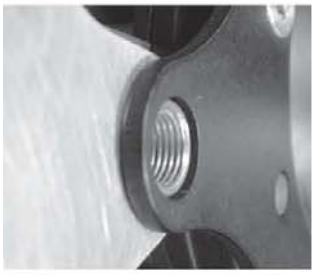

For easy tightening,put a very small amount of grease on the thread of the screw.

Tighten the screw very well.If it continues spinning,check the nut's length (see above).Try turning the chainring around.

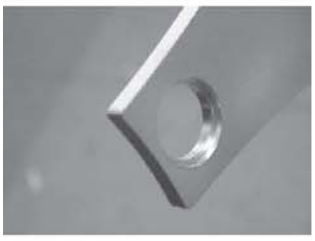

If the length is correct,the screw can be tightened easily without holding the nut.

If the chainring screws aren't tightened enough,they will quickly damage spider and chainring.



Never use thread-locking compounds (Loctite,etc.)!

Advanced Transmission System

B-4

Mass assembly of chainrings



If you are fitting a large number of chainrings,the following device makes it easy:
Take a chainring with the bolt circle diameter of the chainrings, that you have to fit.
Mill out the inner diameter by about 2mm.
Affix the chainring to the edge of your workbench (drill a hole near the outer diameter and use a countersunk screw).
Place the 5 nuts of the chainring screw set, add chainring, spacers, trouser guards and all parts, that you want to fit, and finally the screw (with a small amount of grease).

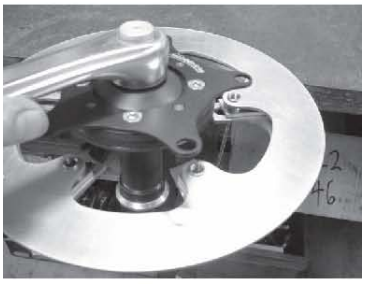



For tightening the screws, fit a crankarm to the workbench or hold it in a vise,and put the ATS-speed drive on top of the crank for final tightening.
Please note: if the length of the nut is correct (not flush with the spider),screws will never spin while being tightened!
Never use thread-locking compounds on chainring screw sets!!



Axle bolts



Apply some grease to the thread of the axle bolt.
Use a 14mm box wrench and tighten the nut with 50-55Nm (40 lb ft).

Axle bolts, that haven´t been tightened with the appropriate torque, can come loose and damage the thin shifting shaft and gear-shift button!

B-5

Gear-shift button



One of the most important adjustments is the correct positioning of the gear shift button.Please spend a few moments reading this to understand why this is so important:

- If a **gear shift push button** is screwed on too much, the clutch, which has to transmit the high torques from the axle to the sunwheel or planet carrier, can´t engage correctly. The load on the teeth of the clutch increases and the clutch can be damaged by excessive pressure.

It is most important, that there is still some inward play on the button, even when it is in its depressed position! It isn´t important how much travel the button still has.



If using our original crankarms, the position of the button is correct, when the push button is flush with the surface of the crank.

If **using your own crankarms**, please check the cranks before of assembling them. Hold the crankarm in your hand and put an axle bolt and gear-shift button in the hole of the crank. Now you can see, whether the button is too high. Its surface should be below the surface of the crankarm.



- The gear shift button must be tightened with a torque of 110 cNm. It may be difficult to find such a low-torque torque wrench. That´s why we include a high-quality 1.5 mm Allen wrench for tightening the gear shift button.

Hold the gear-shift button with a pair of pliers while tightening very firmly. Finally attempt to unscrew them by hand. If you can, you will lose the button soon. Tighten it again!



Never use thread-locking compounds. If the button is tightened correctly, you´ll never lose it.

New gear shift buttons (since October 2004)

The new designed gear shift buttons allow easier tightening.

The button must be approximately flush with the surface of the crank, when being pushed. It can protrude up to 1mm (especially in combination with easy-shift kick plates).



Then tighten the small Allen screw M3x5 within the button by holding the button with the special wrench, that comes with every tool set.

Use a 1.5mm Allen wrench or the 1.5mm bit of our tool sets.

B-6

Mass installation of gear shift buttons

If you will regularly be installing our gearing systems, we recommend using a torque wrench, that can measure a torque of 110cNm.



A torque screw driver is available as accessory.

Easy-shift kickplate installation

Easyshifting even with small shoes and/or clikin pedal systems.
The levers can be retrofitted. They are clamped between crankarm and pedal.The gear shift button remains the same. Important: Easy-shift levers only fit straight 170mm crankarms.

Installation:
- Put the lever to the outside of the crankarm.
- The washer with its concave side towards the crankarm!
- Tighten the pedal.



Please note: if the lever rattles when pedaling, unscrew the pedal again and slightly bend the lever towards the crankarm to give more tension.

Brompton folding bike: no washer at the folding pedal!

Finish: high polished or black anodized aluminum.

C-1

Maintenance


SD165

Lubrication

A plastic cover protects the speed-drive against dust and spray. The cover exerts only a limited pressure to minimize friction losses, and therefore cannot retain an oil-bath.
The original lubrication is done with an **MoS2-lube**, which is a good compromise between oil and grease lubrication charateristics, and is also an effective long-term lubrication in case, the rider never does any maintenance.MoS2-injectors are available as an accessory. They provide enough lubrication for at least 3'000-4'000 miles.
For riding in very low temperatures, oil lubrication gives better results than grease. Insert a few drops 1-2 times a year or after 2'000-3'000 miles. Too much oil can cause leakage.


SD250

If the ATS-speed drive starts running noisily in low gear (when there is no load on the planets) after extended use,this is probably due to a lack of oil on the planet bearings.Insert some lube at the slot screw on the right side.
Very important: Move the crank until you can see another hole at the rotating disk behind the outer hole. Only if the lubricant passes both holes, it reaches the gears.
Grease and oil each have their benefits.MoS2 grease damps noise much more effectively than oil. Oil causes less friction losses, especially at low temperatures.
Never use a different grease than the original MoS2 grease.Quantity:1-2 ml.



Adjusting the gearing play

The axle has three cartridge bearings. Their life expectancy is at least 20,000-30,000 km. These are a standard size (6903 2RS) and commonly available.
The bearings for the planetary system are 3 ball races with balls of 4.00 mm diameter (not 5/32",which is a very similar size).
Please note: the adjustment of the gearing play is made at the factory with painstaking accuracy. Do not change the position of the self-locking nut at the left end of the axle without a good reason.
Only adjust the gearing play, if the chainring has play along the axis of the spindle. Slightly tighten up the self-locking nut on the left end of the axle (only a few degrees).Never tighten the nut too firmly. Preload on the gearing sys-tem may damage the bearings.
Please note, that some play between the cranks and chainring in the direction of rotation is normal and necessary for proper engagement of the gears after switching.
To check a potentially incorrect adjustment, proceed as follows:
- Unscrew the self-locking nut on the axle 1/4 - 1/2 turns.
- Move the chainring in the direction of the spindle to feel the play
- Slowly tighten the nut while moving the chainring at the same time.
- Feel the play decreasing.

Swapping chainrings

Please note,that 34,36 and 38t.chainrings,that are not original ATS-speed drive spare parts have to be milled out at the inner diameter from 94 to 96mm.Otherwise,you will not be able to mount them on the left side of the spider without removing the whole gearing system!
With Brompton folding bikes, use only the original chainrings: they are also milled out to an inner diameter of 96mm.

Removing cranks

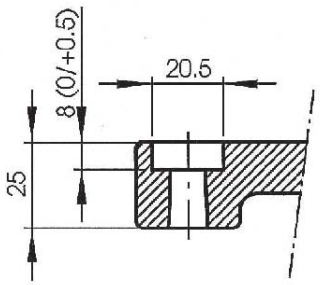

To remove a crank, proceed as follows:
- Hold the gear shift button with pliers and unscrew the tiny Allen screw M3 with an 1.5-mm Allen wrench.
- Unscrew the button.
- Remove the axle bolt with a 14mm box spanner. Check, to make sure that the washer underneath the bolt didn't remain in the axle hole.
- Insert the small tube from our tool set, before using a standard puller to remove the crank.(an M6-nut may do the job as well, if you don't have the original tool set).



Very important: If not using the small tube or an M6 nut, you will destroy the shifting shaft when pushing with a standard puller!
If using a different crankarm not provided by the manufacturer, make sure the hole has a depth of at least 8mm.
Please also make sure that the right-side crankarm is not wider than 25mm,to prevent it from touching the spider when being tightened.

Advanced Transmission System

Technical Data

Tightening torques

- **Black nut on the left side**: 140 - 160 Nm (100 - 115 lbft)

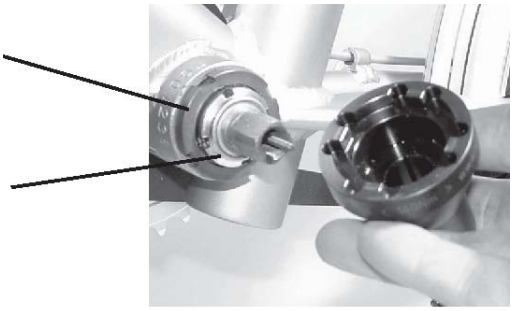

- **Silver nut for adjusting gearing play** 0 Nm (0 lbft)
  No preload!!

- **Axle bolt** 50 - 55 Nm (35 - 38 lbft)

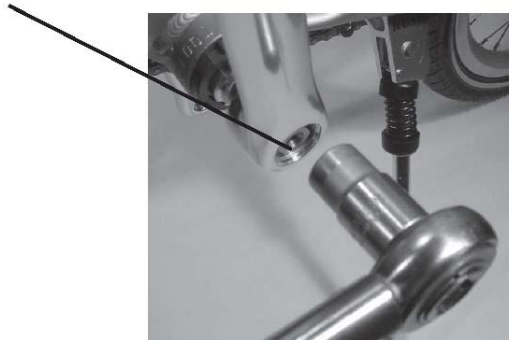

- **Gear shift button** 110 cNm (= 1.1 Nm, or 0.8 lbft)



- **Chainring screws** 12 - 14 Nm (8.5 - 10 lbft)
- **Steel cover** 8 Nm (5.5 lbft)

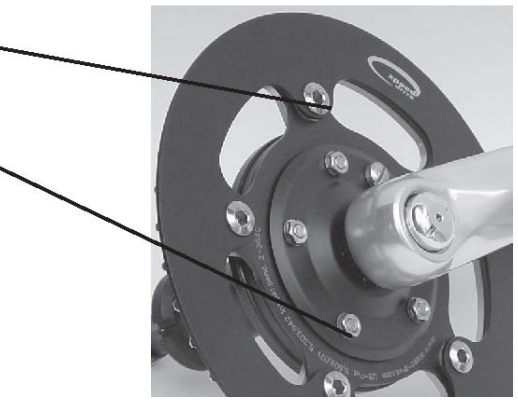

L-1

Check List for ordering

- Installation into an aluminum or steel bottom bracket shell ?

- tooth count of the chainring ?

- with trouser guard or not?

- b.b. shell of standard BSA size (inner diameter 33.6 - 34mm, width 67.5 to 73mm) ?

- standard crankarms 170mm ?

- with easy - shift kick plates ?

- tool set ?

- do you have a 45°milling cutter for chamfering the b.b. shell if mounting with cone rings ?

- if not: buying or renting(we have a rental service in most countries) ?

- shipping: by standard economy or priority post service or with private carrier like FedEx or UPS (more expensive) ?